Looking into the Future Protection, Automation and Control Systems

Working Group K15 on Centralized Substation Protection and Control, IEEE Power System Relaying Committee*

Abstract—The power system dynamic characteristics are changing due to continuous integration of renewable energy sources into the electric grid. Utilities are also focusing on improving customer service and resiliency of the grid by using advanced monitoring and control technologies. These industry initiatives require a renewed attention to protection, automation and control strategies that take advantage of available technologies while promoting newer ones. To explore improved utilization of present technologies and chart the development of the next generation Protection and Control (P&C) technologies, the IEEE Power System Relaying Committee formed a working group to prepare a report on state-of-the-art and emerging technologies for centralized protection and control (CPC) within a substation. This paper summarizes the findings of the WG report.

***Index Terms*—Smart grid, protection & control (P&C), centralized protection & control (CPC), sensors, merging unit (MU), remote input/output (RIO) module, process interface unit/device (PIU/PID), intelligent merging unit (IMU).**

I. INTRODUCTION

The power grid is transforming into a more reliable system with the introduction of advanced outage detection and automated switching, following service interruption, to improve service reliability and to better integrate renewable energy sources. Renewable energy sources are changing power system characteristics at a time when utilities are also focusing on improving customer service and resiliency of the grid, by using advanced monitoring and control technologies. Considering the new characteristics of the grid, it is necessary to take advantage of available technologies in protection, automation and control and promote newer ones in order to ensure grid safety and reliability. The end-of-useful-life issue of protection equipment has an impact on protection system architecture requirement for easy upgrade and replacement. The IEEE Power System Relaying Committee formed a working group to investigate state-of-the-art and emerging technologies for centralized protection and control (CPC) within a substation and chart the development of next generation protection and control technologies. This paper summarizes findings of this working group [1].

This paper starts with the description of CPC and reviews its history in Section I. Section II reviews some of the existing technologies that can support CPC. One of the possible CPC architectures, as an example, is described in Section III along with the reliability and cost aspects of various CPC architectures. Section IV discusses the testing and maintenance aspects of CPC. A pilot project demonstrating that existing technologies are matured enough to support CPC is discussed in Section V. Section VI discusses some of the advanced, emerging and future applications for protection and control.

The paper ends with the conclusion of the working group report that the development of a recommended practice guideline in the use of CPC systems may accelerate the deployment of such systems for distribution networks. Based on the experience in the distribution system, the CPC technology can then be applied to other parts of the power system.

II. CENTRALIZED SUBSTATION PROTECTION & CONTROL

Over the years, protection, automation and control functions have been developed and implemented in relays. The introduction of the numerical relay in the mid-1980s and its evolution since then has created the technology for sharing information among relays and integrating relays into a substation automation and communications scheme [2, 3].

There is no formal definition of centralized protection and control (CPC) in IEEE based upon the working group's survey of IEEE publications. The working group report defines a CPC as a system comprised of a high-performance computing platform capable of providing protection, control, monitoring, communication and asset management functions by collecting the data those functions require using high-speed, time synchronized measurements within a substation. The early CPC systems focused on computer relaying in general and were limited by the technology available at the time [1].

A. History

Westinghouse Electric Corporation developed the WESPAC system and deployed it in several substations starting in early 1980s [4, 5]. American Electric Power (AEP) developed an integrated modular protection and control system (IMPACS) during this period, while ASEA had developed a hybrid system in conjunction with the Swedish State Power Board [6].

The 'Integrated Protection System for Rural Substations' or 'Sistema Integrado de Protección para Subestaciones Rurales' (SIPSUR) system was developed by GE and the North West Utility in Spain, Union Electrica Fenosa, in 1990 [7].

Ontario Hydro developed the integrated protection and control system (IPACS), which was first installed in 1992.

*Paper presented by:

Vattenfalls Eldistribution developed a centralized protection and control system for the island of Gotland in 2000 [8]. The system was developed in collaboration with ABB.

B. *Existing Technologies Supporting CPC*

Fig. 1 illustrates the evolution of the protection, automation, control, monitoring, and communication system leading to a CPC [9]. Block 1 shows electromechanical and solid state relays. Block 2 adds communications with an RTU or data concentrator (a station level device collecting all information from Bay level relays/IEDs), the start of a substation automation system. Block 3 shows communications using protocols like DNP3 (IEEE 1815) and Modbus; more recently, block 3 also represents peer-to-peer communications using GOOSE (IEC 61850). Block 4 shows the transfer of digitized analog values directly to IEDs from merging units using IEC 61850-9-2.

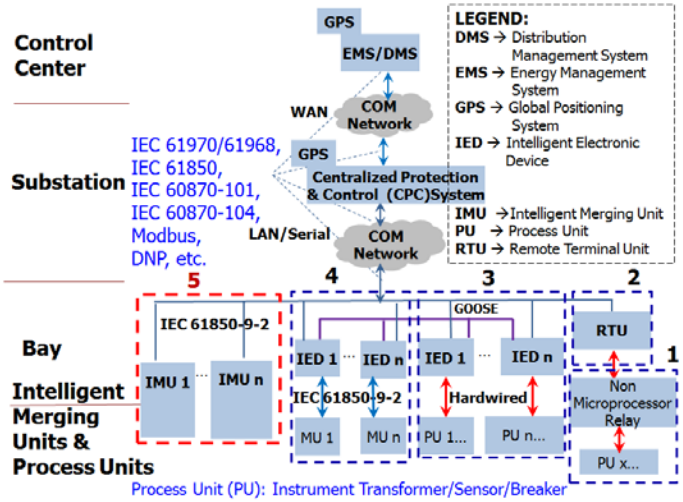

Fig. 1. Evolution of protection, automation, control, monitoring and communication system leading to CPC [9].

Block 5 shows the transfer of sampled analog values from Intelligent Merging Units (IMUs) to CPCs as well as GOOSE messages from CPCs to IMUs, and MMS messages transferred from IMUs to the CPC using fiber optical communication. It is important to note that CPC technology should be able to co-exist with all technologies in a substation, shown in Fig. 1, to be able to attract retrofit application which is often the case in a matured market.

The optical isolation between IMUs and the CPC enables the use of off-the-shelf hardware for the CPC, which is very important for the deployment of CPC. Most protection functions from distributed IEDs within a substation are integrated into the CPC.

Sensors are the front-end interface of CPC with the power system. Recent advancements in sensor technology make a CPC solution more attractive with the use of appropriate merging units (MU) [10]. Advancement in low-cost high-performance computing platforms makes them very attractive for the application of CPCs. Standardized high reliability communication technology can help the implementation of CPC architecture which will be driven by many factors: reduction in Capital Expenditure (CapEx) including the wiring, reduction in Operation Expenditure (OpEx) including easy replacement of hardware at the end-of-useful life [11] and seamless upgrade of firmware without any downtime, to name a few [1].

The remote I/O module (RIO) is intended to be the status and control interface for primary system equipment such as circuit breakers, transformers, and isolators. The process interface unit/device (PIU/PID) combines a MU and a RIO into one device. The PIU/PID can publish analog values and equipment status, and accept control commands for equipment operation. The IMU shown in Fig. 1 adds RMS-based overcurrent and overvoltage back-up protection functions in a PIU/PID to prevent damage to the related primary equipment in the event of total communication failure between the IMU and CPC during abnormal system conditions.

Communication architecture for CPC requires reliable and secure communications infrastructure. There are a number of existing standard redundant protocols used in substation LANs that provide network resiliency – Spanning Tree Protocol (STP), Rapid Spanning Tree Protocol (RSTP) and Media Redundancy Protocol (MRP) to name a few. Current emerging redundant protocol that can be used to guarantee zero (0) second recovery time and zero-frame loss is IEC 62439-3 protocol called High-availability Seamless Redundancy (HSR) and Parallel Redundancy Protocol (PRP). Other examples of future potential technologies/protocols are Time Sensitive Networks (TSN) based on IEEE 802.1 series with Deterministic Ethernet (DE); Software Defined Network (SDN) based on IEEE projects P1903 and 802.1CF; etc.

III. Architecture, Reliability and Cost

The WG K15 report [1] discusses possible architectures of a CPC. The reliability and cost of various architectures are compared, along with a discussion on testing and maintenance of a CPC.

A. *Architecture*

The WG K15 report [1] discusses five possible architectures of a CPC. Fig. 2 shows one of the architectures (5), where IMUs at the process level are interfaced with CPCs over process bus Ethernet LAN.

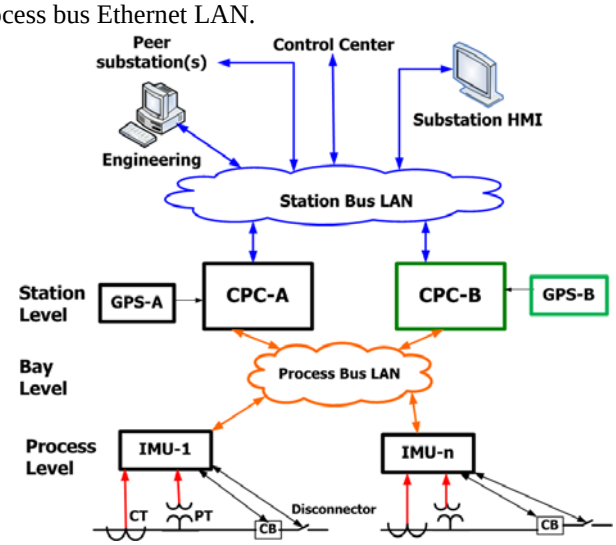

Fig. 2. One CPC architecture in a substation (Architecture 5, [1]).

B. Reliabilty and Cost

The reliability and availability of the possible CPC architectures are evaluated in the report [1]. Time synchronization can be employed using different techniques - LAN-based time synchronization as described in IEEE 1588 shows highest reliability [12].

Table I shows the availability and MTTF of possible architectures as computed in [1]. Architectures that employ a CPC for the primary protection of substation apparatus are considered in the cost analysis, and are limited to Architectures 3, 5, and 5a. Table II shows the cost of the possible architectures studied here. C_{CPC} is the cost of a CPC. While providing highest reliability, Architecture 5a is also the most expensive. The costs of Architectures 3 and 5 are very close while Architecture 3 is more reliable with a MTTF of five years as compared to four years for Architecture 5.

Table I
Performance Evaluation of Different Architectures

	Availability	**MTTF (Yrs)**	**Rank**
Architecture 1	0.99930983	3.9	4
Architecture 2	0.999266029	3.7	5
Architecture 3	0.999474115	5.0	2
Architecture 4 (Option 1)	0.99930983	3.9	4
Architecture 4 (Option 2)	0.998866402	2.4	6
Architecture 5	0.999342683	4.0	3
Architecture 5a	0.999999524	5.9	1

Table II
Cost Evaluation of Different Architectures

	Cost	**Cost Rank**	**Reliability Rank**
Architecture 3	$2\times C_{CPC}+72{,}000$	1	2
Architecture 5	$2\times C_{CPC}+76{,}000$	2	3
Architecture 5a	$2\times C_{CPC}+150{,}000$	3	1

C. Comparison of Traditional and CPC Approach

Table III shows the comparison between the traditional and the CPC approaches. The traditional approach refers to all possible technologies – electromechanical, solid-state and IED or a combination of the above technologies applied on a per bay basis. The CPC approach is defined at the beginning of Section II.

IV. Testing and Maintenance

The CPC concept does not change the general need for testing protection and control systems, but this concept can change the specific requirements for, or methods of, testing. The biggest change is that the CPC separates the application controller from the physical I/O devices. This modular nature allows for separate testing of the CPC and the I/O devices and comparisons that can change many current testing activities into future self-monitoring activities.

A. Elements to Test

Under the CPC concept, there are three elements – the CPC, the I/O devices, and the communications network between the CPC and the I/O devices. All three elements have different testing requirements and can be tested independently. The CPC must be verified as working correctly. Since the CPC is an application controller, the major goal is to ensure the CPC is configured correctly for the specific application, and that it communicates correctly to I/O devices. Testing must ensure protection decisions are made correctly and timely, so that processor loading and application priority is not a factor. Performance testing of the CPC will probably require different processes and techniques than used for testing traditional relays. These processes and techniques are not clearly defined at this time, and will be dependent on the capabilities and implementation of a specific CPC.

B. Acceptance Testing

CPC has little impact on the general requirements for acceptance testing, other than the requirements for tools and procedures. It is necessary to verify that the CPC will perform protection functions as desired, even with the maximum number of functions enabled. This will require verifying the performance of individual protection elements, along with verifying the performance of the entire CPC. The processes, tools, and models necessary for acceptance testing of a CPC will take careful thought and design. It is also necessary to understand the number of I/O devices a CPC can connect, the number and types of messages it can receive and send, and specific performance requirements for the communications network. I/O devices must be tested for functionality and communications, including the number and types of control messages it can receive.

C. Commissioning Testing

Commissioning testing is where the CPC concept has a large impact. The virtual nature of the CPC allows commissioning checks on CPC to be done in a laboratory/office environment. I/O devices require on-site commissioning to prove the physical parts of the hardware are operating correctly. The communications network must be proven to operate within performance parameters during commissioning. It is desirable to perform final commissioning checks on site to only verify connections, not completely retest the entire system.

D. Maintenance Testing

The CPC concept has a large impact on maintenance testing. There is no need for maintenance testing of the CPC itself due to self-testing, monitoring and diagnostics. There is limited need for testing I/O devices. Using multiple I/O devices to collect the same data allows self-testing capability for analog channels and to some extent, contact inputs. However, the physical I/O, especially output contacts, must still be verified to be operating correctly during normal primary equipment maintenance outages. The communications network also requires no maintenance testing due to self-testing and built-in diagnostics.

Table III
Comparison Between Traditional and CPC Approaches

Feature	Traditional Approach	CPC Approach
Relay Asset Management	Many relays need to be separately identified, specified, configured, tested, and maintained along with separate records for each device.	A limited number of devices need to be identified, specified, configured, tested, and maintained along with separate records for each device.
Device Management	Each protection IED in a substation typically has numerous configuration choices to enable various features. Firmware versions must be tracked and updated periodically.	A reduced count of devices makes management easier and also the feature set is reduced and limited compared to traditional methods.
Maintenance	Routine maintenance can be frequent and requires experienced and well-trained staff along with expensive calibrated testing equipment. P&C IED maintenance per bay is easily achieved due to separate IEDs per bay.	Limited maintenance is required as the entire substation P&C system uses fewer physical devices, though experienced and well-trained staff are still required for maintenance. More robust and reliable systems can be engineered at a lower cost depending on substation size. P&C IED per bay does not exist, and hence independent per bay maintenance is an avoidable challenge.
Security	Multitude of protection IEDs provides more access points for cyber threats.	Very limited number of access points which can also be managed better.
Interoperability	Disparate protocols and difficult to standardize. Modifications to the substation automation system can be complicated.	Capitalizes mainly on the IEC 61850 technology and can be more easily adopted than the distributed protection IED model. User requirement of engineering knowledge such as "GOOSE" messaging configuration between IEDs will not be required as it will be internal to the system.
Substation Master Interface	Depending upon the technology, the protection IED may have no communication interface with an RTU or data concentrator. More recent technologies have protection IEDs tightly integrated into a substation automation system to transfer data in and out of the substation with limited intelligence.	The CPC becomes the "Gatekeeper" of Device Dynamic Models. Relays are ubiquitous. This provides a master intelligent node for substation-to-substation interaction. Collected data is reduced to information via the dynamic state estimation. Information is exchanged between substations, with control center and downstream intelligent devices versus raw data; tremendous reduction in communication needs.

E. Troubleshooting

The CPC concept helps improve troubleshooting. The configuration and the performance of the CPC can be quickly verified in a laboratory setting. I/O devices, if a possible cause, must still be tested using more traditional methods. Communications messages can be simulated or monitored without actually going to or from the CPC. State estimation can also point out possible problems with I/O devices.

V. Demonstration Project

A CPC-based substation protection, automation, and control system (PACS), iSAS, by LYSIS LLC in Russia is in pilot operation at the 110/10 kV *Olympic* substation in northwest Siberia [13].

A. Overview of iSAS project

The *Olympic* substation has two power transformers, two incoming 110 kV overhead power lines, and 40 feeders connected to four 10 kV busbars. The goals of the project are to 1) search for an optimal system architecture, as well as iSAS lifecycle management, 2) research and analyze system characteristics, 3) provide technical and economic analysis, 4) provide reliability analysis and 5) quantify the advantages and disadvantages of the PACS system, for wider use by the Distribution System Operator (DSO), *Tumenenergo*.

The PACS has to perform the full functionality of protection, control, and metering systems for the entire substation. The project has five phases: 1) Design, 2) Procurement, installation and testing, 3) Trial operation for one year, 4) Analysis of regulators requirements, rules, and standards, and proposing amendments in these documents for homologation of software-based PAC systems in the Russian market, and 5) Certification of measuring method for process bus-based systems with separate measuring (process interfacing devices, PID) and calculation (IEDs) parts.

LYSYS LLC has completed the first two phases and the system is in trial operation.

B. iSAS PACS Architecture

The core of the PACS is the iSAS software suite. The logical structure of the system is independent of its physical implementation. The customer's requirements, such as placing revenue metering and PQ functionality into a dedicated server with its separate cabinet, were taken into consideration. An optimization was done to define the most suitable and effective physical system structure for this particular substation. Optimization studies resulted in the five layer system structure shown in Fig. 3.

Layer 1: The current and voltage transformers for protection and metering of 110 kV lines are connected to the Bay Main PID (BMPID). The BMPID was installed into a

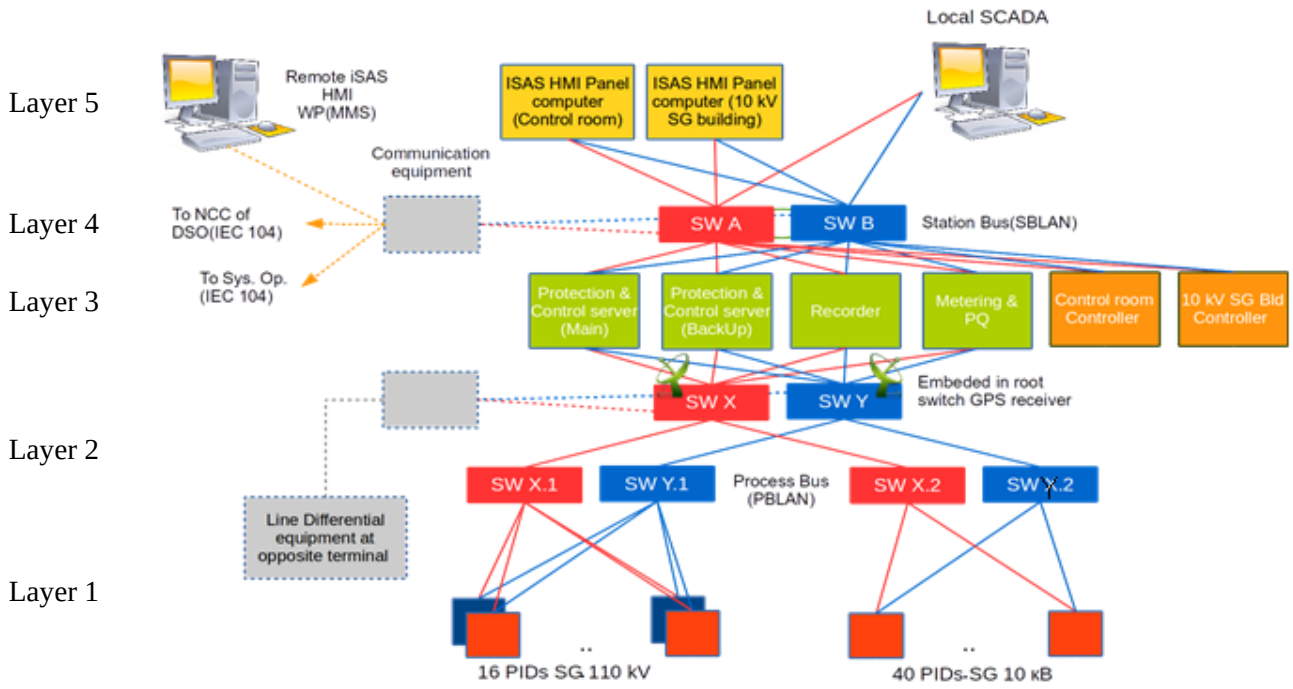

Fig. 3. The PACS structure of 110/10 kV "Olympic" substation in Northwest Siberia, Russia [13].

cabinet near the line AIS CB drive's cubicle and include control interfaces of switching devices. The BMPID has two optical Ethernet interfaces connected to a PRP redundant network. The BMPID implements IEC 61850 logical nodes XSWI, XCBR, TCTR, TVTR, and the other configurable sensor models. The BMPID supports both IEC 61850 GOOSE and sampled values protocols. Time synchronization of the BMPID is accomplished with the IEEE 1588v2 protocol. The 10 kV PID also provides information from arc sensors.

Layer2: Layer 2 is a process bus LAN (PBLAN) which uses double star topology with PRP support, and all devices connected to PBLAN are double attached nodes. Root switches of PBLAN double stars have embedded PTP servers and play a role of precision timing source for PIDs and other system equipment using the GLONASS satellite system.

Layer 3: Layer 3 of the system is composed of computational devices. The complete PACS functionality has been divided among four powerful servers: the main and backup protection and control (P&C) servers, the metering and power quality server, and the substation-scale faults and transient events recorder server. These servers were installed into two cabinets, with the main and backup P&C servers mounted separately. The cabinets are installed in an existing communication equipment room with strong immunity from electromagnetic influences. The servers support the PRPs to communicate with field PIDs through PBLAN and RSTP to connect to the substation bus ring. Complete protection and control functionality is performed by 2546 logical nodes. The nodes have been distributed between ten virtual IEDs (vIEDs) which are similar to physical IEDs with their own MMS servers and work asynchronously with the other vIEDs, even if they are placed in the same computational hardware.

Layer 4: The Station Bus LAN (SBLAN) is formed by an RSTP ring based on two SBLAN switches. Main communication services use IEC 61850-8-1 MMS reporting, logs retrieval, and controlling services. MMS reports are created and sent by IEDs to HMI and local SCADA devices. IEC 60870-5-104 protocol is used to communicate with the DSO's National Control Center (NCC) and with the system operator branch office.

Layer 5: The fifth layer includes the operator's HMIs and NCC as well as other external interfaces. The software installed in the operator panel is a part of the iSAS suite and provides a visualization tool based on a mosaic-like concept using IEC 61850 MMS client. The DSO office has one remote operator workstation with iSAS HMI software with the same capabilities as panels in the substation. One more interface is provided only for monitoring data exchange with the system operator branch office. Another interface is available for the communication with NCC of DSO with both monitoring and control of data exchange. Both interfaces use the IEC 60870-5-104 protocol.

VI. Advanced, Emerging and Future Applications

This section discusses some of the advanced, emerging and future applications that can only be applied with a CPC approach while some other applications will significantly benefit in having the high-performance computing platform at the substation which centralizes protection and control. More details about these applications are discussed in the report [1].

A. Power Quality Disturbance Classification

Due to various reasons such as nonlinear loads and faults, voltage and current waveforms may deviate from the normal

sinusoidal waveforms. Such deviation is called power quality disturbance or power quality event. Common types of power quality disturbances include voltage sag, swell, interruption, harmonic, impulse, flicker, switching transient, and notch, etc. An increasing number of power quality meters have been deployed in power systems, so automated classification of captured power quality disturbances is desirable. Typical methods utilize Fourier transforms and wavelet transforms to extract features and intelligent techniques like artificial neural network, and adaptive neuro-fuzzy inference system (ANFIS) for making a decision [14].

B. *State Estimation-based Protection Method*

The dynamic state estimation (DSE) based protection method (setting-less protection) requires a monitoring system for the component under protection that continuously measures terminal data (such as the terminal voltage magnitude and angle, the frequency, and the rate of frequency change), and other variables such as temperature, speed, etc., as appropriate, and component status data such as the tap setting, breaker status, etc. The dynamic state estimation processes these measurements and determines whether the measurements are consistent with the model of the protection zone, i.e. whether the measured data "fit" the model. A good fit between the measurements and the model equations indicates normalcy and also provides an independent verification of the model of the protection zone [15]. An overall generic demonstration of the setting-less protection approach is discussed in the report [1].

C. *Pattern Classification-based Protection Method*

The power system can benefit from a global layer of knowledge that oversees the protection and breaker operation. This knowledge will either corroborate the protection action or invalidate it. This knowledge can result in averting or significantly alleviating a potential blackout. To work toward such a system, disturbance signatures from phasor measurement units (PMUs) can be utilized. Pattern recognition can be very useful to classify disturbances using features extracted from disturbance files as reported in [16] using real data from four PMUs.

VII. Conclusion

The paper summarizes the findings of the working group report on centralized protection and control within a substation [1]. The report concluded that the development of a recommended practice guideline in the use of CPC systems may accelerate the deployment of such systems for distribution networks. These systems will be helpful for advancing distribution protection and automation that can accommodate high penetration of distributed energy resources. There are more opportunities to apply CPC systems in distribution networks as these systems are continuously upgraded and/or expanded. Based on the experience in the distribution system, the CPC technology can then be applied to other parts of the power system. The implementation of CPC approach will require a paradigm shift in the design, manufacturing, installation, testing, operation and maintenance of a protection and control system.

VIII. Acknowledgements

This paper is prepared by working group K15 of the Substation Protection Subcommittee of the IEEE Power System Relaying Committee of the Power & Energy Society: "Centralized Substation Protection and Control". Working Group Members include Ratan Das* (Chair), Mital Kanabar* (Vice Chair), Mark Adamiak*, Alex Apostolov*, Galina Antonova*, Sukumar Brahma*, Mohammad Dadash Zadeh*, Rich Hunt*, Jack Jester*, Mladen Kezunovic*, Mike Kockott*, Ljubomir Kojovic*, Raluca Lascu*, Yuan Liao*, Yuri Luskind*, Vahid Madani*, A.P. (Sakis) Meliopoulos*, René Midence*, Paul Myrda*, Anderson Oliveira*, Joshua Park*, Craig Preuss*, Qun Qiu*, Mohindar Sachdev*, Ilia Voloh* and Joe Xavier*, * indicates contributing author.

References

[1] (2015). "Centralized Substation Protection and Control," *IEEE Power System Relaying Committee WG K15 Report*, December, 2015.[Online]. Available: http://www.pes-psrc.org/Reports/IEEE_PES_PSRC_WG%20K15_Report_CPC_Dec_2015.pdf

[2] (2009). "Understanding microprocessor-based technology applied to relaying," *IEEE Power System Relaying Committee WG I16 Report*. [Online]. Available: http://www.pes-psrc.org/Reports/UNTAR-Ed2.pdf

[3] (2013). "Communications technology for protection systems," *IEEE Power System Relaying Committee WG H9* Report. [Online]. Available: http://www.pes-psrc.org/Reports/IEEE%20PSRC%20Subcommittee%20H9%20Understanding%20Comm%20Tech%20for%20Protection%20-20130113%20D8F.pdf

[4] J.S. Deliyannides, M. Kezunovic, T.H. Schwalenstocker, "An Integrated Microprocessor Based Substation Protection and Control System," Developments in Power System Monitoring and Control, IEE, IEE Conference Publ. No. 187, London, England, April 1980.

[5] J.S. Deliyannides and E.A. Udren, "Design Criteria for an Integrated Microprocessor-based Substation Protection and Control System," IEEE Transactions on Power Apparatus and Systems, vol. PAS-101, no.6, pp. 1664 – 1673, June 1982.

[6] Nilsson et al., "Pros and cons of Integrating protection and control in transmission substations," *IEEE Transactions on Power Apparatus and Systems*, vol. PAS-104, no. 5, pp. 1207 – 1224, May 1985.

[7] (1990). "Integrated Protection System for Rural Substations – SIPSUR," *GE Protection & Control and Union Electrica Fenosa (Spain)* under a PIE research project, internal report.

[8] P. Norberg, A. Fogelberg and A. Johnsson, "Field Experiences From Using PC Software for Protection and Control of AC Substations", *in Proc. CIGRE General Session*, Paris, France, Paper B3-208, 2006.

[9] Das et al., "Distribution Automation Strategies: Evolution of Technologies and the Business Case", *in Proc. IEEE Transactions on Smart Grid*, doi:10.1109/TSG.2014.2368393, vol. 6, no. 4, pp. 2166-2175, July 2015.

[10] Lj. A. Kojovic, "Integration of Protection, Control, and Metering Functions", *in Proc. 44th CIGRE General Session*, Paris, France, 2012.

[11] (2015). "End-Of-Life Assessment of P&C Devices," IEEE Power System Relaying Committee WG I22 Report.

[12] (2011). M. Kanabar, "Investigating Performance and Reliability of Process Bus Networks for Digital Protective Relaying", *Western University - Electronic Thesis and Dissertation Repository*, Paper 272.

[13] I. Dorofeyev, "First deployment of fully digital software-based PAC system on substation 110/10 kV - Basic points of experience and first results," *PAC World Conference 2015*, UK, June 29 –July 2, 2015.

[14] T. Nguyen and Y. Liao, "Power quality disturbance classification based on adaptive neuro-fuzzy system," International Journal of Emerging Electric Power Systems, vol. 10, no. 3, Article 4, June 2009.

[15] Meliopoulos et al., "Setting-less Protection: Feasibility Study," in *Proc. of the 46st Annual Hawaii International Conference on System Sciences*, Maui, HI, USA, January 7-10, 2013.

[16] O. P. Dahal, H. Cao, S. M. Brahma, "Evaluating performance of classifiers for supervisory protection using disturbance data from phasor measurement units", *in Proc. ISGT Europe*, Istanbul, Turkey, October 2014.